Burroughs Corporation

March 15, 1967

PRELIMINARY INFORMATION

ELECTRONIC COMPONENTS DIVISION

Plainfield, New Jersey

NIXIE® TUBE BEZEL ASSEMBLY
TYPE BFB

The new BFB series bezel is designed to compliment the contemporary lines of today's new instruments and systems. The bezel is flat and protrudes only .3" from the panel and no mounting hardware is visible. The bezel is expandable in both the length and height dimensions and can be assembled in various combinations to accommodate all NIXIE tube sizes from the miniature through the jumbo, including all side viewing sizes. More than one row of NIXIE tubes may be accommodated in one bezel.

Because of the complete flexibility of this bezel, it is now possible to "Custom Design" a complete readout package to suit your specific applications.

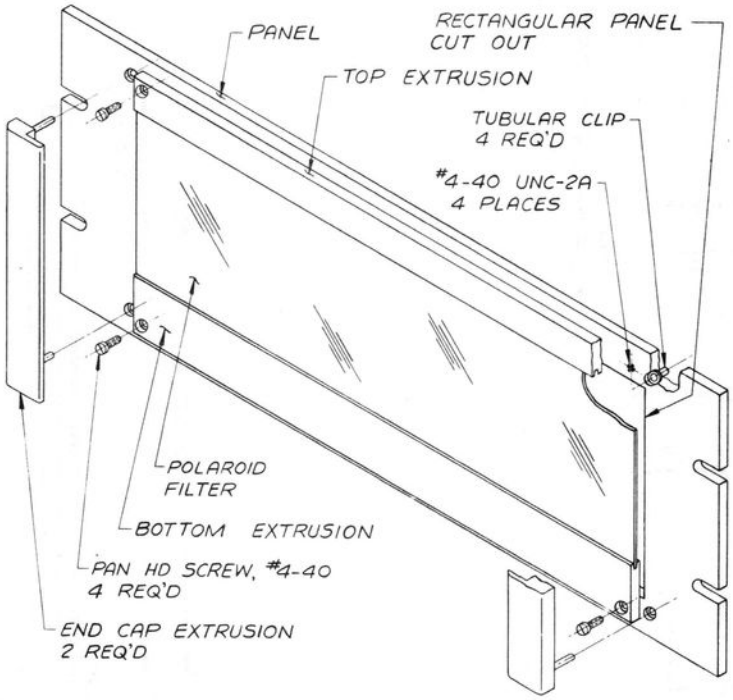

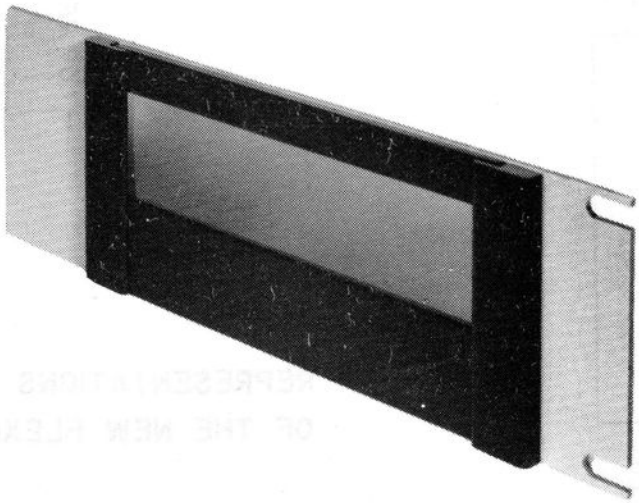

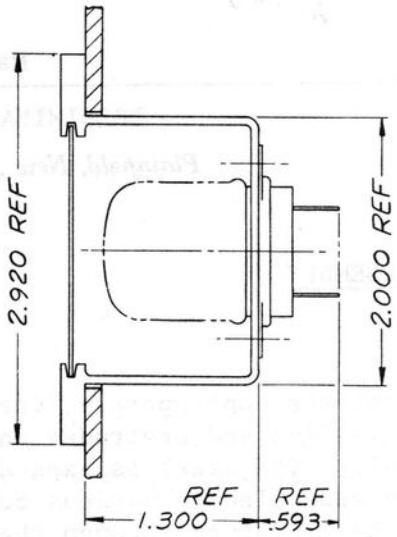

STYLE 01

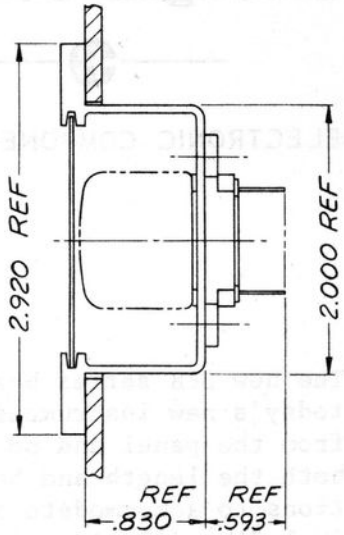

STYLE 02

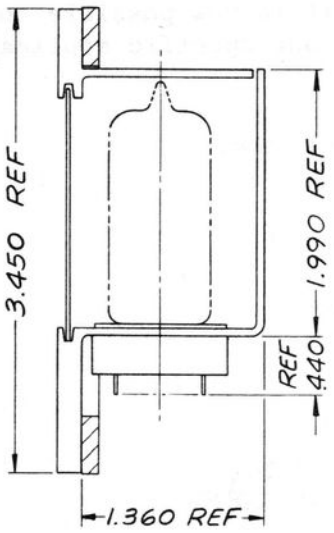

STYLE 34

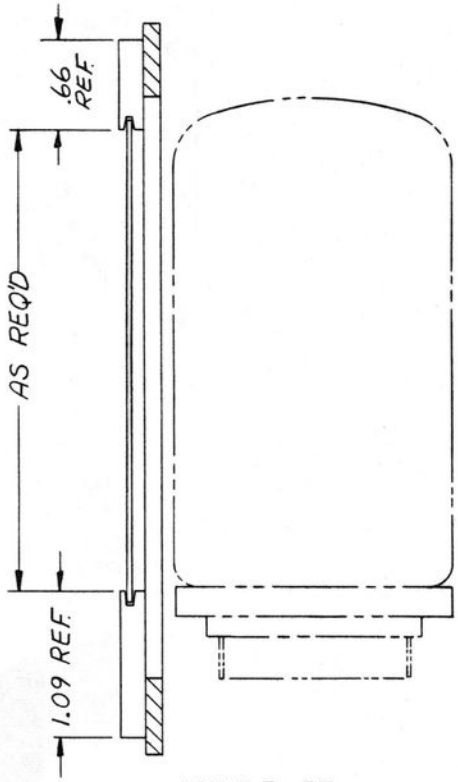

STYLE 57

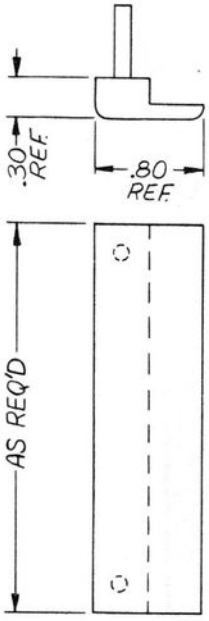

END CAP

REPRESENTATIONS OF SOME CONFIGURATIONS OF THE NEW FLEXIBLE BEZEL SERIES.